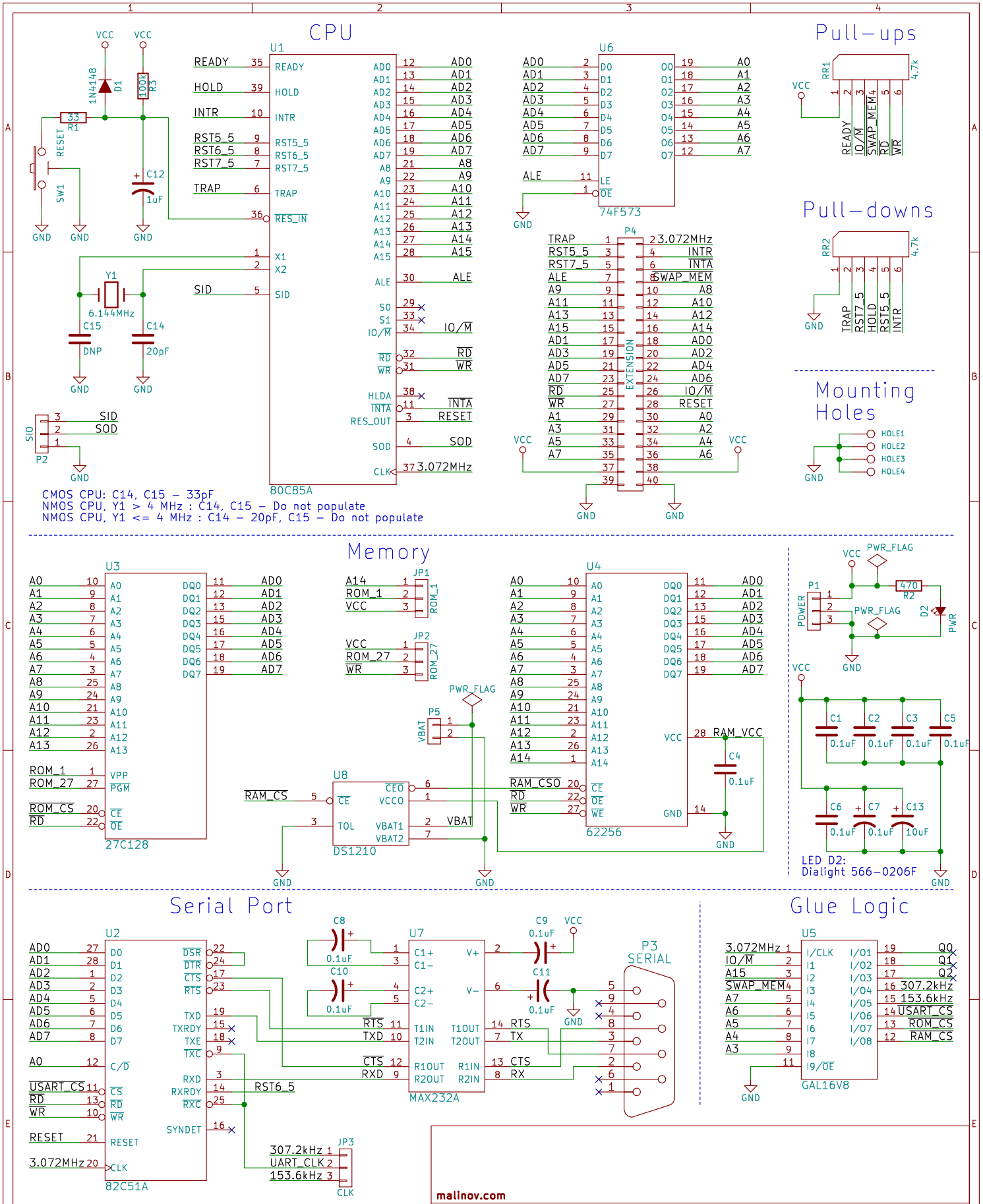

ROM Type	Pin 1	Pin 27
27C128	VCC	VCC
27C256	VCC	A14
28C256/SRAM	A14	WE
29C256	WE	A14

JP3	UART Clock
1–2	307.2 kHz / 16 = 19200
1–2	307.2 kHz / 64 = 2400
2–3	153.6 kHz / 16 = 9600
2–3	153.6 kHz / 64 = 1200

malinov.com

Sheet: /

File: Mini8085.sch

Title: Minimal 8085A Single Board Computer

Size: USLetter | Date: 21 aug 2015 | Rev: 1.0

KiCad E.D.A. kicad 4.0.1-stable | Id: 1/1