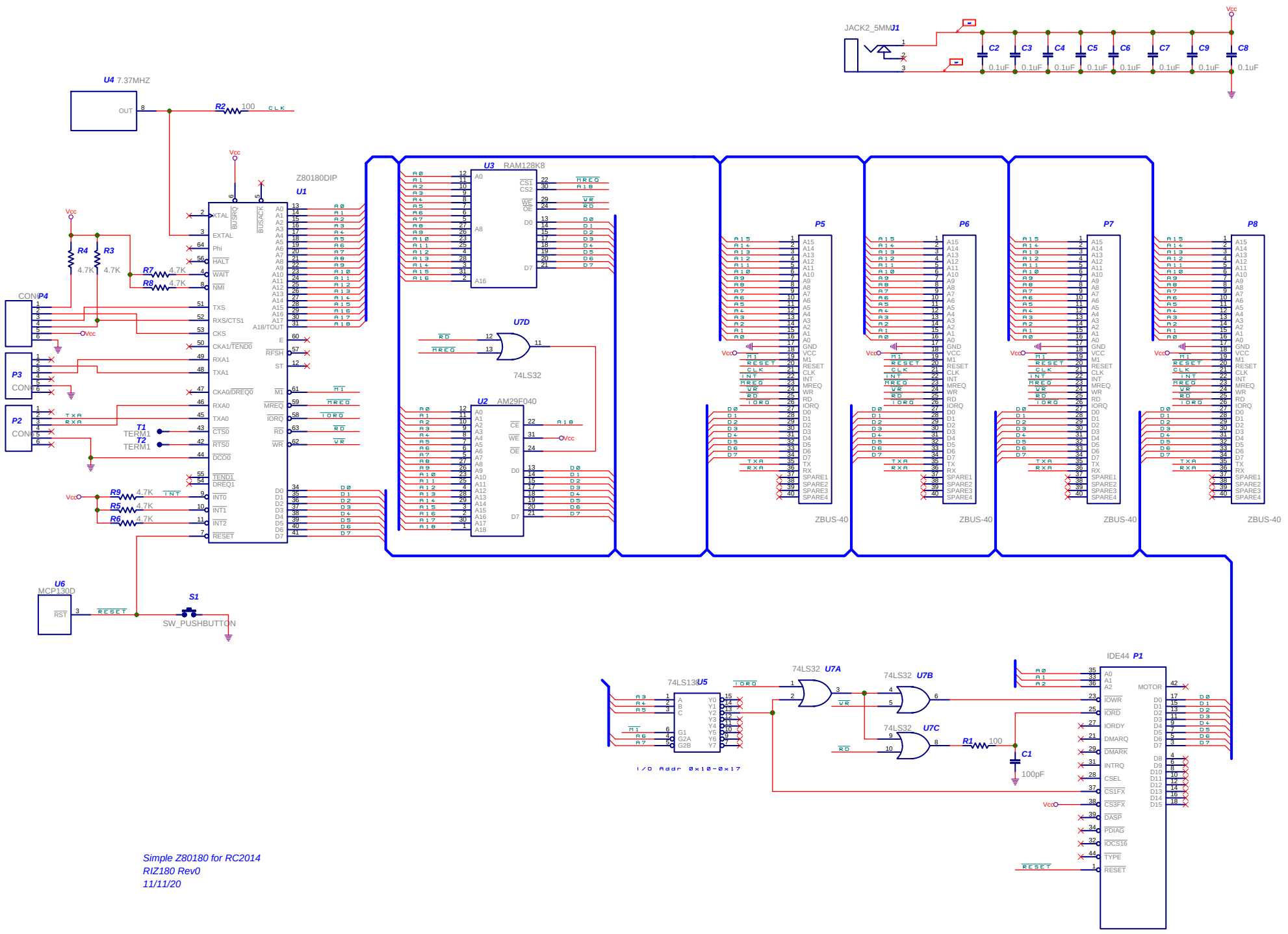

Simple Z80180 for RC2014
RIZ180 Rev0
11/11/20