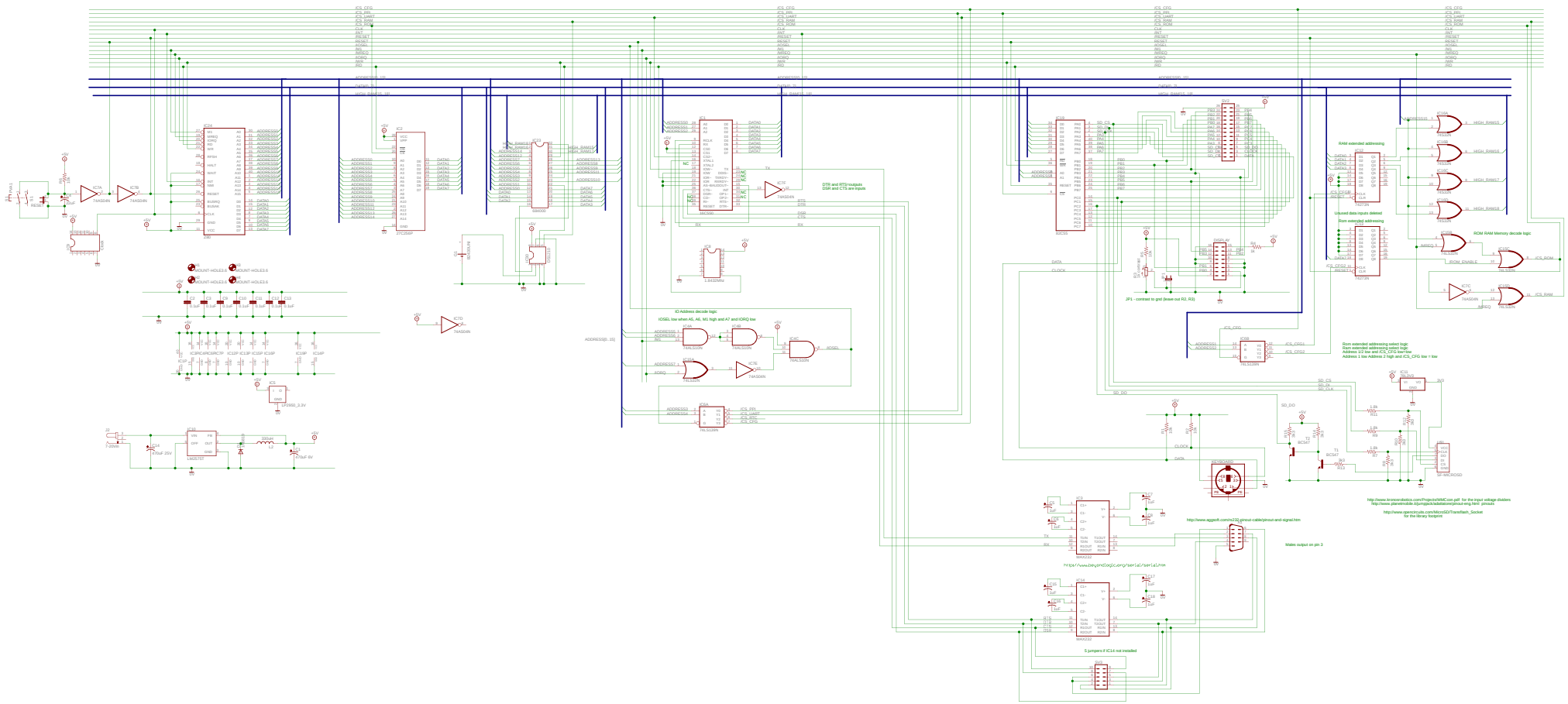
RAM extended addressing
Unused data inputs deleted
Rom extended addressing
ROM RAM Memory decode logic
IO Address decode logic
IOSEL low when A5, A6, M1 high and A7 and IORQ low
DTR and RTS=outputs
DSR and CTS are inputs
JP1 - contrast to gnd (leave out R2, R3)
Rom extended addressing select logic:
Rom extended addressing select logic:
Address 1/2 low and /CS_CFG low=low
Address 1 low Address 2 high and /CS_CFG low = low
http://www.aggsoft.com/rs232-pinout-cable/pinout-and-signal.htm
Makes output on pin 3
http://www.lexmorrobotics.com/Projects/MMC.pdf for the input voltage dividers
http://www.planetmobile.it/jumpjack/datatomeo/pinout-eng.html pinouts
http://www.opencircuits.com/MicroSD/Transflash_Socket
for the library footprint
http://www.beyondlogic.org/serial/serial.htm
5 jumpers if IC14 not installed